PassTest

Bessere Qualität , bessere Dienstleistungen!

Q&A

http://www.passtest.de

Einjährige kostenlose Aktualisierung

Exam : **70-236**

Title : TS: Exchange Server 2007, Configuring

Version : Demo

1.You are employed as the exchange administrator at Hi-Tech.com. The Hi-Tech.com network contains an Exchange Server 2007 Organization. You are responsible for managing the Exchange network for Hi-Tech.com. There is a Mailbox server named S01 in the company. On S01, the mailbox transaction log volume has very little free disk space remaining. At the time that you move several large mailboxes to another Mailbox server, no additional free disk space is made available on the mailbox transaction log volume on S01. You plan to increase the amount of free disk space on the mailbox transaction log volume on S01. So what action should you perform?

A.A full backup of the database should be performed.

B.The deleted item retention period should be decreased.

C.An online defragmentation of the database should be run.

D.An offline defragmentation of the database should be run.

Answer:A

2.You work as an Exchange Administrator at Hi-Tech.com. The Hi-Tech.com network contains an Exchange Server 2007 server named Server01. All features of the Client Access server role are provided by Server01. Server01 suffers a catastrophic hardware failure and need to be replaced. You install a new Exchange Server 2007 server named Server02 on the Hi-Tech.com network. You then restore the System State data of Server01 onto Server02 and install the Client Access server role on Server02. You now need to restore the services as they were provided by Server01. What should you do? (Each correct answer represents part of the solution. Choose TWO.)

A.You should run the Set-CASMailbox cmdlet on Server02.

B.You should restore the \bin\ directory from Server01 onto Server02.

C.You should run the Setup /mode: RecoverServer command on Server02.

D.You should restore the \ClientAccess\ directory from Server01 onto Server02.

Answer:C D

3.You are employed as the exchange administrator at Wiikigo. The Wiikigo network contains an Exchange 2007 Organization. You are responsible for managing the Exchange network for Wiikigo. You work under the environment of Exchange Server 2007. Now you receive an order from the company. You are asked to convert multiple shared mailboxes to resource mailboxes. So what action should you perform?

A.Run the Set-Mailbox cmdlet.

B.Run the Connect-Mailbox cmdlet.

C.Run the Set-ResourceConfig cmdlet.

D.Use the Exchange Management Console.

E.Use Active Directory Users and Computers.

Answer:A

4.You are employed as the exchange administrator at Wiikigo. The Wiikigo network contains an Exchange 2007 Organization. You are responsible for managing the Exchange network for Wiikigo. Your Exchange Server 2007 computers are configured with the default settings. You need to send copies of all e-mail messages that are sent and received by user@wiikigo.com to monitor@wiikigo.com. What action should you perform?

A.E-mail forwarding should be configured on the users account. It should be set to forward e-mail to monitor@wiikigo.com.

B.Run the Set-JournalRule -Name:'User' -JournalEmailAddress:'user@wiikigo.com' -Scope:'Global' -Enabled:$true -Recipient:'monitor@wiikigo.com' cmdlet.

C.Run the New-JournalRule -Name:'User' -JournalEmailAddress:'user@wiikigo.com' -Scope:'Global' -Enabled:$true -Recipient:'monitor@wiikigo.com' cmdlet.
D.Run the New-JournalRule -Name:'User' -JournalEmailAddress:'user@wiikigo.com' -Scope:'Internal' -Enabled:$true -Recipient:'monitor@wiikigo.com' cmdlet.
Answer:C
5.You are employed as the exchange administrator at wiikigo.com. The wiikigo.com network contains an Exchange 2007 Organization. You are responsible for managing the Exchange network for wiikigo.com. The company decides to have selected users removed to a new Exchange Server 2007 Mailbox server. You can see the time window for the user move and other current time windows from the table listed below. It takes three hours to finish the existing backups, and it is expected that time should be enhanced to four hours after the user moves start. You are required to have a new time window created for the backups, and the amount of impact should be minimized on the server. From the following four time windows, which one should be created for the backups?

User move	Current backup	Online maintenance	Heavy access
18:00-19:00	18:00-21:00	21:00-02:00	06:00-16:00

A.Time window 18:00 - 22:00 should be created for the backups
B.Time window 02:00 - 06:00 should be created for the backups
C.Time window 19:00 - 23:00 should be created for the backups
D.Time window 20:00 - 24:00 should be created for the backups
Answer:B
6.You are employed as the exchange administrator at wiikigo.com. The wiikigo.com network contains an Exchange 2007 Organization. You are responsible for managing the Exchange network for wiikigo.com. You are required to provide the necessary but least allowance for a new administrator. The administrator should make preparations of Active Directory for Exchange Server 2007. What should you do to achieve the goal? (Choose more than one.)
A.To achieve the goal, the new administrators user account should be added to the Enterprise Admins group.
B.To achieve the goal, the new administrators user account should be added to the Schema Admins group.
C.To achieve the goal, the new administrator should be added as an Exchange Full Administrator at the organization level.
D.To achieve the goal, the new administrators user account should be added to the Exchange Enterprise Servers group.
E.To achieve the goal, the new administrators user account should be added to the Domain Admins group.
Answer:A B
7.You are employed as the exchange administrator at Wiikigo. The Wiikigo network contains an Exchange 2007 Organization. You are responsible for managing the Exchange network for Wiikigo. You work under the environment of Exchange Server 2007. Several of your technicians use Microsoft Office Outlook Web Access from kiosk computers. Now you receive report from the technicians saying that they receive a message stating that their access is blocked for attachments that have the .bas file extension. Since you are the technical support, you have to make sure that the technicians are able to use Outlook Web Access to access files that have the .bas file extension. So what action should you perform?
A.The direct file access settings should be customized for public computers.

B.The settings on the /Exchange virtual directory should be modified.
C.The Enable direct file access check box for public computers should be cleared.
D.The Enable direct file access check box for private computers should be cleared.
Answer:A
8.You are employed as the exchange administrator at Wiikigo. The Wiikigo network contains an Exchange 2007 Organization. You are responsible for managing the Exchange network for Wiikigo. You work under the environment of Exchange Server 2007. According to the company requirement, you are asked to prevent your users from sending e-mail messages that contain sensitive financial information to recipients outside your company. So what action should you perform?
A.A journal rule that applies to internal and external users should be created.
B.A transport rule that applies to all messages from external users should be created.
C.A transport rule that applies to all messages to external users should be created.
D.A journal rule that applies only to all internal users should be created.
E.A journal rule that applies only to all external users should be created.
Answer:C
9.You are employed as the exchange administrator at Wiikigo. The Wiikigo network contains an Exchange 2007 Organization. You are responsible for managing the Exchange network for Wiikigo. You work under the environment of Exchange Server 2007. There is a Mailbox server named S01 in this environment. You have to disable subject logging on S01. You need to be able to continue to use message tracking. Which cmdlet should be run?
A.You should run Set-MailboxServer S01 -MessageTrackingLogEnabled $false
B.You should run Set-MailboxServer S01 -MessageTrackingLogEnabled $true
C.You should run Set-MailboxServer S01 -MessageTrackingLogSubjectLoggingEnabled $false
D.You should run Set-MailboxServer S01 -MessageTrackingLogSubjectLoggingEnabled $true
Answer:A
10.You are employed as the exchange administrator at Wiikigo. The Wiikigo network contains an Exchange 2007 Organization. You are responsible for managing the Exchange network for Wiikigo. A custom Security Configuration Wizard (SCW) policy is applied to an Exchange Server 2007 Edge Transport server named Exch01. You want to apply this policy to a new Edge Transport server named Exch02. You need to apply the custom policy to Exch02. You install SCW on Exch02. You have the existing SCW policy copied to Exch02 as C:\ExchangeSCWPolicy.xml. So what action should you perform?
A.First, apply the C:\ExchangeSCWPolicy.xml policy by using SCW. Then, run the Scwcmd register /kbname:"Ex2007EdgeKB" /kbfile:"%programfiles%\Microsoft\Exchange Server\scripts\Exchange2007.xml" command.
B.First, apply the C:\ExchangeSCWPolicy.xml policy by using SCW. Then, run the Scwcmd register /kbname:"Ex2007KB" /kbfile:"%programfiles%\Microsoft\Exchange Server\scripts\Exchange2007Edge.xml" command.
C.First, run the Scwcmd register /kbname:"Ex2007EdgeKB" /kbfile:"%programfiles%\Microsoft\Exchange Server\scripts\Exchange2007.xml" command. Then, apply the C:\ExchangeSCWPolicy.xml policy by using SCW.
D.First, run the Scwcmd register /kbname:"Ex2007KB" /kbfile:"%programfiles%\Microsoft\Exchange Server\scripts\Exchange2007Edge.xml" command. Then, apply the C:\ExchangeSCWPolicy.xml policy by using SCW.

Answer:D

11.You are employed as the exchange administrator at Wiikigo. The Wiikigo network contains an Exchange 2007 Organization. You are responsible for managing the Exchange network for Wiikigo. Your company merges with Luxware, Ltd. Each companys mixed e-mail system includes Exchange Server 2003 servers and Exchange Server 2007 servers, and Outlook 2003 clients and Outlook 2007 clients. At present your company has a single remote SMTP domain for *, which is configured with the Allow none option. You have to configure the delivery of out-of-office (OOF) messages to the luxware.com domain, and you must make sure that no users outside of the two merged companies can receive OOF messages. So what action should you perform?

A.Add a new remote domain for *.luxware.com, and choose the Allow external out-of-office only option.

B.Choose the Allow external out-of-office only option on the remote domain *.

C.Add a new remote domain for *. luxware.com, and choose the Allow internal out-of-office and out-of-office set by Outlook 2003 or earlier clients and set on Exchange 2003 or earlier servers option.

D.Choose the Allow external out-of-office and out-of-office set by Outlook 2003 or earlier clients and set on Exchange 2003 or earlier servers option on the remote domain *.

Answer:C

12.You are employed as the exchange administrator at wiikigo.com. The wiikigo.com network contains an Exchange 2007 Organization. You are responsible for managing the Exchange network for wiikigo.com. There is an Exchange Server 2007 environment. It is reported by a user that after the mailbox is deleted, the mailbox cannot be found in the deleted mailbox retention dumpster. Therefore, you are required to have the mailbox restored. Which two actions should be performed to achieve the goal? (Choose more than one.)

A.To achieve the goal, the Database Troubleshooter tool should be utilized.

B.To achieve the goal, a dial tone recovery should be performed.

C.To achieve the goal, the Connect-Mailbox cmdlet should be run.

D.To achieve the goal, the Import-Mailbox cmdlet should be run.

E.To achieve the goal, the Restore-Mailbox cmdlet should be run.

F.To achieve the goal, the database in a recovery storage group should be restored.

Answer:E F

13.You employed as the exchange Administrator at Hi-Tech.com. The Hi-Tech.com network contains an Exchange 2007 Organization. The Hi-Tech.com network consists of four Active Directory sites. The four sites are named A, B, C and D respectively. There is a Hub Transport server role and a Mailbox server role installed on each of these Active Directory sites. The Active Directory sites on the Hi-Tech.com network are configured as shown in the exhibit below. Hi-Tech.com management decided that all messages between the A and D sites should be routed through the Exchange server that is installed in the C site. You need to ensure that the messages between the A and D sites are routed through -EX03 in the C site. What should you do?

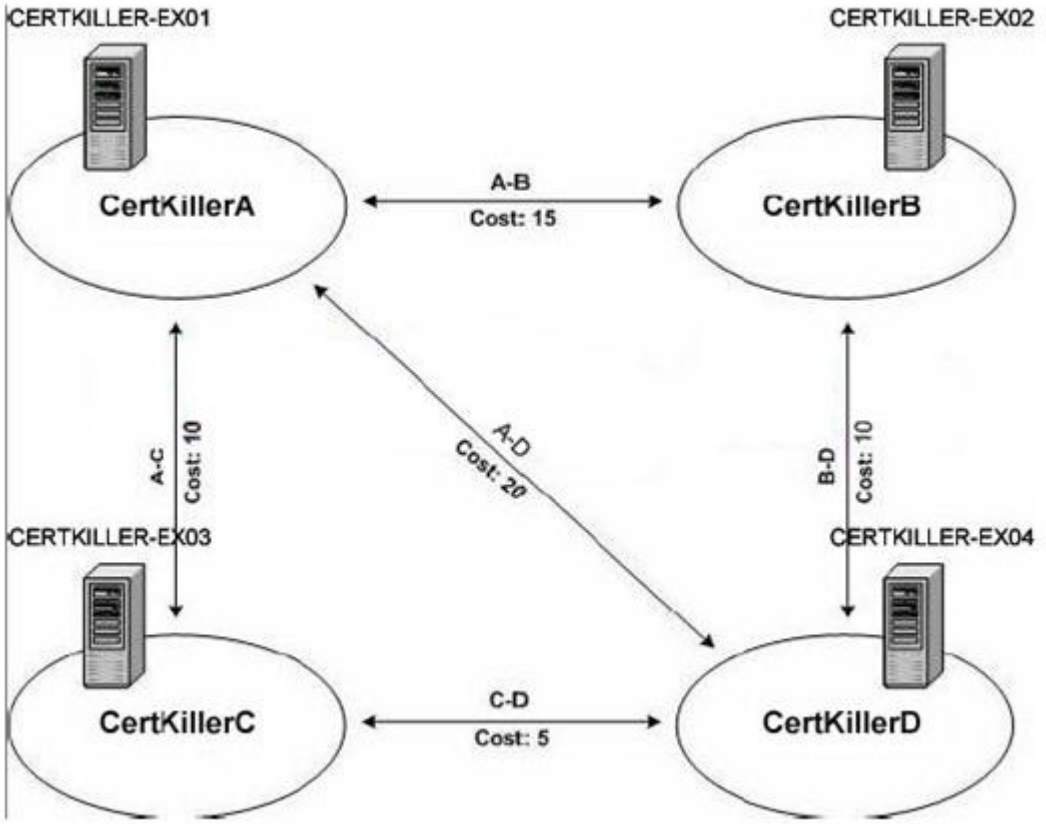

A.You should run the Set- AdSiteLink -Identity A-C - ExchangeCost 25 cmdlet.
B.You should run the Set- AdSiteLink -Identity A-C - ExchangeCost 5 cmdlet.
C.You should run the Set- AdSite - Identity C - HubsiteEnabled $true cmdlet.
D.You should run the Set- AdSite - Identity C - HubsiteEnabled $false cmdlet.
Answer:C
14.You are employed as the exchange administrator at wiikigo.com. The wiikigo.com network contains an Exchange 2007 Organization. You are responsible for managing the Exchange network for wiikigo.com. There is an Exchange Server 2007 environment. A full backup is implemented each night prior to the maintenance window. You set the deleted item retention period to 10 days. According to the company requirements, the total storage that is required for backups should be decreased. Which action should be performed to achieve the goal?
A.To achieve the goal, the deleted item retention period should be enhanced to 15 days.
B.To achieve the goal, the backups should be performed after the maintenance window.
C.To achieve the goal, an incremental backup should be performed each night, and a full backup should be performed each weekend.
D.To achieve the goal, the deleted item retention period should be reduced to 5 days.
Answer:C
15.You are employed as the exchange administrator at wiikigo.com. The wiikigo.com network contains an Exchange 2007 Organization. You are responsible for managing the Exchange network for wiikigo.com. There is an Exchange Server 2007 environment. You are required to have SMTP protocol logging enabled on the Exchange server for one of the Receive connectors. Which action should be performed to achieve the goal?
A.To achieve the goal, Performance Monitor should be utilized to add the MSExchangeTransport

SmtpReceive object.
B.To achieve the goal, the Set-ReceiveConnector cmdlet should be run.
C.To achieve the goal, the Set-TransportServer cmdlet should be run.
D.To achieve the goal, the MSExchangeTransport.exe.config file should be changed.
Answer:B
16.You are employed as the exchange administrator at Wiikigo. The Wiikigo network contains an Exchange 2007 Organization. You are responsible for managing the Exchange network for Wiikigo. You work under the environment of Exchange Server 2007. Now you receive an order from the company management. You are asked to reduce the total size that is required for the transaction log volume. What action should you perform?
A.The deleted item retention period should be increased.
B.The deleted item retention period should be decreased.
C.A full backup should be run on the Mailbox server each night.
D.A differential backup should be run on the Mailbox server each night.
Answer:C
17.You are employed as the exchange administrator at Wiikigo. The Wiikigo network contains an Exchange 2007 Organization. You are responsible for managing the Exchange network for Wiikigo. You work under the environment of Exchange Server 2007. You have an organizational unit (OU) named Marketing. You have to view a list of all users in the Marketing OU that have the word Manager in their title. Which cmdlet should you run?
A.Get-Recipient should be run.
B.Get-User should be run.
C.Get-Mailbox should be run.
D.Get-MailUser should be run.
Answer:B
18.You are employed as the exchange administrator at wiikigo.com. The wiikigo.com network contains an Exchange 2007 Organization. You are responsible for managing the Exchange network for wiikigo.com. Exchange Server 2007 is utilized by you. Full backups are performed each night. You are required to confirm that valid mailbox data is included by a backup. Which action should be performed to achieve the goal?
A.To achieve the goal, the Clean-MailboxDatabase cmdlet should be run.
B.To achieve the goal, the restored database backup should be mounted in a recovery storage group.
C.To achieve the goal, the Eseutil.exe command-line tool should be utilized.
D.To achieve the goal, the Database Troubleshooter tool should be utilized.
Answer:B
19.You are employed as the exchange administrator at Wiikigo. The Wiikigo network contains an Exchange 2007 Organization. You are responsible for managing the Exchange network for Wiikigo. You work under the environment of Exchange Server 2007. Now you need to view a report that displays the mailbox quota status for all of your users. Which cmdlet should be run?
A.Get-MailboxStatistics should be run.
B.Get-MailboxDatabase | fl should be run.
C.Get-MailboxDatabase -Status should be run.
D.Get-MailboxStatistics | ft DisplayName, ItemCount should be run.
Answer:A

20.You are employed as the exchange administrator at wiikigo.com. The wiikigo.com network contains an Exchange 2007 Organization. You are responsible for managing the Exchange network for wiikigo.com. As you can see from the diagram listed below, an Exchange Server 2007 single copy cluster (SCC) is being configured on Windows Server 2003. You are required to have the network adapters set on each server, and the two network adapters are respectively named NetAdp01 and NetAdp02. You set the adapters so as to make sure that the private network connection between the two servers is not a single point of failure. How should you set the network adapters so as to achieve the goal?

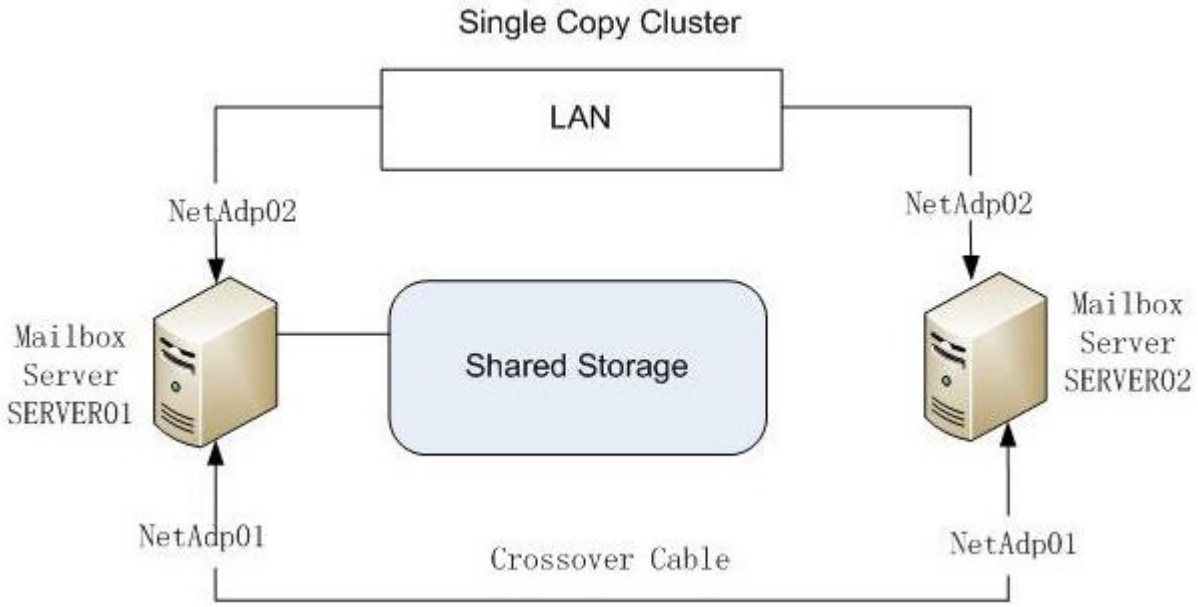

A.NetAdp01 Client access only (public network)NetAdp02 All communications (mixed network)
B.NetAdp01 Internal Cluster Communications only (private network)NetAdp02 All communications (mixed network)
C.NetAdp01 Internal Cluster Communications only (private network) NetAdp02 Client access only (public network)
D.NetAdp01 All communications (mixed network)NetAdp02 Client access only (public network)
Answer:B

21.You are employed as the exchange administrator at Wiikigo. The Wiikigo network contains an Exchange 2007 Organization. You are responsible for managing the Exchange network for Wiikigo. You work under the environment of Exchange Server 2007. Your company issues a new e-mail policy to meet requirements in the compliance regulations. According to the company requirement, you have to retain a copy of all messages that are received from external senders and retain a copy of all messages that are sent between your legal department and all employees. Besides, you have to make sure that no other messages are archived. What should you do to achieve your goal? (Choose more than one)
A.A journaling rule that has an internal scope should be created for all your employees.
B.A journaling rule that has a global scope should be created for your legal department.
C.A journaling rule that has an internal scope should be created for your legal department.
D.A transport rule should be created on your Edge Transport servers to archive messages that are sent to your legal department.
E.A transport rule should be created on your Edge Transport servers to archive messages that are sent to all of your employees.
Answer:C E

22.You are employed as the exchange administrator at Wiikigo. The Wiikigo network contains an Exchange 2007 Organization. You are responsible for managing the Exchange network for Wiikigo. You work under the environment of Exchange Server 2007. There are four servers in the Exchange Server 2007 environment of your company. S01 plays the role of Mailbox server, S02 plays the role of Client Access server, S03 plays the role of Hub Transport Server, and S04 plays the role of Edge Transport Server. Users require Internet Message Access Protocol Version 4 rev1 (IMAP4) to access their e-mail. You have IMAP4 access enabled on the appropriate mailboxes. Since you are the technical support, you have to make sure that users are able to use IMAP4 to access their e-mail. On which server should you configure the IMAP4 service?

A.IMAP4 service should be configured on S01.

B.IMAP4 service should be configured on S02.

C.IMAP4 service should be configured on S03.

D.IMAP4 service should be configured on S04.

Answer:B

23.You are employed as the exchange administrator at Wiikigo. The Wiikigo network contains an Exchange 2007 Organization. You are responsible for managing the Exchange network for Wiikigo. There is a Hub Transport server named ExchHub1 in your Exchange Server 2007 organization. ExchHub1 has a Foreign connector named FaxCon that connects to a fax server named Fax1. You move the Drop directory for Fax1 by performing the following steps. On Fax1, create a new directory named FaxDir. Run the Set-ForeignConnector "FaxCon" -DropDirectory "FaxDir" cmdlet.Run the Set-TransportServer ExchHub1 -RootDropDirectoryPath "\\Fax1\Drop Directory" cmdlet. You have to make sure that all messages pending delivery are delivered. So what action should you perform?

A.In order to make sure of this, all messages in the old Drop directory should be copied to the new Drop directory.

B.In order to make sure of this, the Administrators group with Full Control permission should be added to the new Drop directory.

C.In order to make sure of this, the Set-ForeignConnector cmdlet should be run with the appropriate parameter to set the maximum message size.

D.In order to make sure of this, the Set-ForeignConnector cmdlet should be run with the appropriate parameter to set the size of the Drop directory.

Answer:A

24.You are employed as the exchange administrator at Hi-Tech.com. The Hi-Tech.com network contains an Exchange 2007 Organization. You are responsible for managing the Exchange network for Hi-Tech.com. During routine maintenance of the Exchange server you discover that the settings that indicate the storage limits for the mailbox stores differ. You need to ensure that the Exchange server mailbox stored have similar storage limits and thus have to create an Exchange Management Shell script to accomplish this. What should you do?

A.Create the script by ensuring that the output of the Get-MailboxDatabase cmdlet is redirected to the Set-MailboxDatabase cmdlet with the correct parameters.

B.Create the script by ensuring that the output of the Get-Mailbox cmdlet is redirected to the Set-MailboxDatabase cmdlet with the correct parameters.

C.Create the script by ensuring that the output of the Get-ExchangeServer cmdlet is redirected to the Set-MailboxDatabase cmdlet with the correct parameters.

D.Create the script by ensuring that the output of the Get-MailboxDatabase cmdlet is redirected to the

Set-Mailbox cmdlet with the correct parameters.

Answer:A

25.You are employed as the exchange administrator at Wiikigo. The Wiikigo network contains an Exchange 2007 Organization. You are responsible for managing the Exchange network for Wiikigo. Two Exchange servers named Exch1 and Exch2 are contained in your Exchange Server 2007 organization. Exch1 fails and cannot be restored to service. All mailboxes need to be moved from Exch1 to Exch2. Which cmdlet should be run?

A.You should run Get-Mailbox -Server Exch1 | Move-Mailbox -ValidateOnly -TargetDatabase "Exch2\First Storage Group\Mailbox Database"

B.You should run Get-Mailbox -Server Exch1 | Move-Mailbox -IgnoreRuleLimitErrors -TargetDatabase "Exch2\First Storage Group\Mailbox Database"

C.You should run Get-Mailbox -Server Exch1 | Move-Mailbox -ConfigurationOnly -TargetDatabase "Exch2\First Storage Group\Mailbox Database"

D.You should run Get-Mailbox -Server Exch1 | Move-Mailbox -IgnorePolicyMatch -TargetDatabase "Exch2\First Storage Group\Mailbox Database"

Answer:C

26.You are employed as the exchange administrator at Wiikigo. The Wiikigo network contains an Exchange 2007 Organization. You are responsible for managing the Exchange network for Wiikigo. There are three servers in your environment. S01 plays the role of Exchange Server 2003 Mailbox server, S02 plays the roles of Exchange Server 2007 Mailbox and Hub Tansport server, S03 plays the role of Exchange Server 2007 Client Access server. You receive report from users who have mailboxes on S01. They receive an error message when they attempt to synchronize through Exchange ActiveSync. Since you are the technical support, you have to make sure that all users can use Exchange ActiveSync. So what action should you perform?

A.Basic authentication should be enabled on S01.

B.Basic authentication should be enabled on S02.

C.Basic authentication should be enabled on S03.

D.Integrated Windows authentication should be enabled on S01.

E.Integrated Windows authentication should be enabled on S02.

F.Integrated Windows authentication should be enabled on S03.

Answer:D

27.You are employed as the exchange administrator at Wiikigo. The Wiikigo network contains an Exchange 2007 Organization. You are responsible for managing the Exchange network for Wiikigo. Tom is John's assistant. Because of working requirements, Tom needs to be able to view all of the folders and subfolders in John's mailbox and to open and respond to John's e-mail. Since you are the technical support, you have to give Tom the appropriate permissions. So what action should you perform?

A.The Add-ADPermission -Identity John -User Tom-AccessRights Self -ExtendedRights Send-As cmdlet should be run.

B.The Add-MailboxPermission -Identity John -User Tom-AccessRights FullAccess cmdlet should be run.

C.The Add-MailboxPermission -Identity John -User Tom-AccessRights ExternalAccount cmdlet should be run.

D.The Allow-Full Control permission for Johns user account should be assigned to Tom in the Active Directory Users and Computers management console.

Answer:B

28.You are employed as the exchange administrator at wiikigo.com. The wiikigo.com network contains an Exchange 2007 Organization. You are responsible for managing the Exchange network for wiikigo.com. You are employed as the exchange administrator at Hi-Tech.com. The Hi-Tech.com network contains an Exchange 2007 Organization. You are responsible for managing the Exchange network for Hi-Tech.com. You work under the environment of Exchange Server 2007. The Hub Transport server role should be installed on an Exchange Server 2007 Mailbox server, the Exchange Server 2007 Mailbox server Exchange Server 2007 Mailbox server is named Ex01. You must implement the installation during non-business hours. You confirm that the location of Exchange Server 2007 installation, it is installed on EX01 at C:\Program Files\Microsoft\Exchange Server. In addition, a copy of the Exchange installation files is in the C:\InstallFiles custom directory. A new file named install.bat is created in the root directory of drive C. Since you are exchange administrator, you are required to have the installation of the Hub Transport server role scheduled on EX01. Which action should you perform to achieve the goal?

A.You should type the following command: "C:\Program Files\Microsoft\Exchange Server\Setup" /mode RecoverServer /roles HubTransportCreate a scheduled task to run the executable in the install.bat file.

B.You should type the following command: "C:\InstallFiles\Setup" /mode Install /roles HubTransportCreate a scheduled task to run the executable in the install.bat file.

C.You should type the following command: "C:\Program Files\Microsoft\Exchange Server\Setup" /mode Install /roles HubTransportCreate a scheduled task to run the executable in the install.bat file.

D.You should type the following command: "C:\InstallFiles\Setup" /mode RecoverServer /roles HubTransportCreate a scheduled task to run the executable in the install.bat file.

Answer:C

29.You are employed as the exchange administrator at wiikigo.com. The wiikigo.com network contains an Exchange 2007 Organization. You are responsible for managing the Exchange network for wiikigo.com. Your company sets Exchange Server 2007 organization in two Active Directory sites named S01 and S02. S01 is set for the 10.10.5.0/24 subnet, and S02 is set for the 10.10.20.0/24 subnet. You can see the Exchange servers in the two sites from the table below. A problem occurs that ExCAS01 fails to work. It is reported by S02 users that Microsoft Office Outlook Web Access (OWA) cannot be accessed. You are required to recover OWA service to S02 users. Which action should be performed to achieve the goal?

Site	S01	S02
Servers	Mailbox and Client Access server Hub Transport server	Clustered mailbox server Hub Transport server Client access server
Server names	ExMbCAS01 ExHub01	ExCMS01 ExHub02 ExCAS01

A.To achieve the goal, the Client Access server role should be added to ExHub02.

B.To achieve the goal, the Client Access server role should be added to ExHub01.

C.To achieve the goal, a new OWA virtual directory should be created on ExMbCAS1.

D.To achieve the goal, the mailbox configuration of the users should be removed on ExCMS1 to ExMbCAS1.

Answer:A

30.You are employed as the exchange administrator at wiikigo.com. The wiikigo.com network contains an Exchange 2007 Organization. You are responsible for managing the Exchange network for wiikigo.com.

There is an Exchange Server 2007 environment. And a single Hub Transport server named Ser01 is contained. In addition, a legacy SMTP server is contained. The legacy SMTP server is set to deliver e-mail to the Internet through Ser01. However, you find a problem that the messages which are received by internet users are not from the legacy SMTP server. Since you are the exchange administrator, you are required to make sure that the legacy SMTP server should be enabled to deliver e-mail to the Internet through Ser01. Which action should be performed to achieve the goal?

A.A new Receive connector should be created. And then, the Anonymous permission should be added. At last, the Relay permission should be assigned to Anonymous users on the Receive connector.

B.A new Receive connector should be created. And then, the Anonymous permission should be added. At last, the IP address of the legacy server should be added to the remote network settings on the Receive connector.

C.The legacy server should be updated to deliver e-mail messages to Ser01 on port 587.

D.The IP address of the legacy server should be added to the remote network settings on the Default Ser01 Receive connector.

Answer:A