PassTest

Bessere Qualität , bessere Dienstleistungen!

Q&A

http://www.passtest.de

Einjährige kostenlose Aktualisierung

Exam : **50-886**

Title : cni-foundations of novell networking:netware 6.5

Version : DEMO

1.Which describes the role of the Novell Distributed Print Services (NDPS) printer agent?
A.It downloads the correct print driver to the workstation.
B.It responds to queries from clients about the status of a print job.
C.It provides a platform for printer objects that reside on the server.
D.It allows NDPS clients to sent print jobs to printers that are not NDPS-aware.
E.It redirects print jobs to directory on the server while waiting for the printer to become available.
F.It takes application-specific data from the application creating the print job and reformats it to work with the printer it is being sent to.
Correct:B
2.You're implementing a NetWare 6.5 network for a small business client: Jessica's Bakery. There is only one server in the network. You've named the server BAKERY1 and installed it into an eDirectory tree named JESSICASBAKERY-TREE. You've used a random password generator to create a password for the tree's Admin user. To ease administration, you've located the server next to the Point of Sale system in the customer area of the bakery. You deployed Universal Password on the server. All workstations have Novell Client 4.9 installed on them. You created a NFAP share on the server for the SHARED and the FINANCE directories on the server's DATA volume. Does this configuration meet Novell's security recommendations?
A.Yes, all Novell security guidelines have been met.
B.No, the server should be placed in a locked closet or room.
C.No, you shouldn't use Universal Password with Novell Client version 4.9.
D.No, you shouldn't use the business name in the server or eDirectory tree names.
E.No, you shouldn't create NFAP shares for directories containing financial information.
F.No, you shouldn't use a random password generator for the Admin password. It's easy to hack.
Correct:B
3.Which web-based services does Virtual Office provide? (Choose 3.)
A.Chat
B.Calendar
C.Bookmarks
D.Spreadsheet
E.Word processor
F.Project management charts
Correct:A B C
4.During the installation of NetWare 6.5, the server files are installed on the _____ volume. Answer:
A.SYS
Correct:A
5.You've just finished configuring an iPrint system on your NetWare 6.5 server. The server's DNS name is iprint.widget.com. The Manager object is named IPP-Printer in the SLC.WIDGET container. The Broker object is named IPP-Broker and is also in SLC.WIDGET. You've used the Maptool.htm file to configure a map named slcoffice.htm for location-based printing. What URL should you enter in your browser's Address field to test the iPrint map?
A.http://iprint.widget.com/slcoffice.htm
B.http://iprint.widget.com/Ipp/slcoffice.htm
C.http://iprint.widget.com/Ippdocs/Maptool.htm

D.http://iprint.widget.com/iPrint/slcoffice.htm
E.http://iprint.widget.com/Ippdocs/slcoffice.htm
F.http://iprint.widget.com/Ipp/slcoffice.htm -b=IPP-Broker.SLC.WIDGET
G.http://iprint.widget.com/Ippdocs/slcoffice.htm -m=IPP-Printer.SLC.WIDGET

Correct:E

6.Click the Exhibit button to begin. Given the explicit right assignments shown, what rights does CGrayson have to the MHoffmann user object?

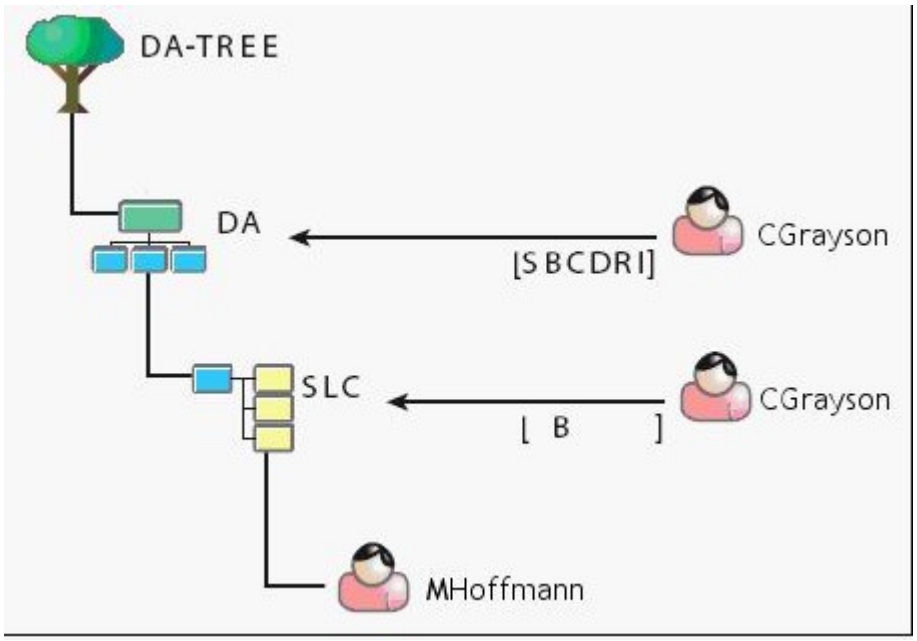

A.Supervisor
B.Browse
C.Browse, Create
D.Browse, Create, Delete
E.Browse, Create, Delete, Rename, Inheritable
F.Supervisor, Browse, Create, Delete, Rename
G.Supervisor, Browse, Create, Delete, Rename, Inheritable
H.CGrayson has no rights to the MHoffmann user object.

Correct:B

7.Your company specializes in the production of digital video products. Your company has been recently awarded a very large contract that has a very short deadline. Your NetWare 6.5 server currently uses a single 80 GB IDE hard disk drive. The new contract will require considerably more hard disk storage. You've purchased and installed a 400 GB RAID5 disk array designed specifically for non-linear video editing. The array came with a diskette containing NetWare drivers. Which file on your server should you edit to load these drivers?

A.RAID.NCF
B.SERVER.EXE
C.CONFIG.SYS
D.STARTUP.NCF
E.STARTUP.CFG
F.STORAGE.NCF

G.AUTOEXEC.BAT
H.RAID5 array drivers can only be loaded manually from the server console.
Correct:D
8.Which utilities can you use to manage directory and file attributes on a NetWare 6.5 server? (Choose 2.)
A.ICE
B.FLAG
C.iManager
D.iMonitor
E.NDS Manager
F.Remote Manager
Correct:B F
9.Your company's business procedures require the use of triplicate forms. To accommodate this, you have secured an older dot-matrix printer to deploy in your network. It doesn't have a network interface. It will be connected directly to one of your server's LPT ports using an IEEE 1284 parallel cable. You use Novell Distributed Print Services (NDPS) to provide print services to your users. This printer doesn't have an embedded printer agent. Can you use it with NDPS?
A.Yes, all prerequisite requirements have been met.
B.No, the NDPS manager doesn't support older dot-matrix printers.
C.No, the NDPS broker is incompatible with the IEEE 1284 standard.
D.No, NDPS doesn't support printers that don't have an embedded printer agent.
E.No, a printer agent can't be created for printers that connect to the server with a parallel cable.
Correct:A
10.Which utility can be used to create NSS volumes in NetWare 6.5? (Choose 2.)
A.NSSMU
B.iMonitor
C.NWCONFIG
D.ConsoleOne
E.NDS Manager
F.NetWare Administrator
Correct:A D
11.You're designing the eDirectory tree for your company. Your company is composed of four distinct subsidiary organizations. You decide to create four Organization objects at the root of your tree to represent each. Each subsidiary has its own Vice President who is in charge of the organization. You decide to create a user object for each Vice President in their respective Organization object. Will this design work?
A.Yes, all eDirectory rules have been observed.
B.No, user objects can't reside in an Organization object.
C.No, Organization objects can only reside within Country objects.
D.No, there can only be one Organization object within a given tree.
E.No, Organization objects should not be used to represent subsidiaries. Organizational Unit objects should be used instead.
Correct:A
12.Which of the following are system files used by DR-DOS? (Choose 3.)

A.NTLDR
B.IO.SYS
C.MSDOS.SYS
D.IBMBIO.COM
E.IBMDOS.COM
F.COMMAND.COM
G.NTDETECT.COM
H.PAGEFILE.SYS

Correct:D E F

13.Which file system attribute indicates that the file has been modified at some point since the last backup operation?

A.A
B.H
C.P
D.Ci
E.Dc
F.Di
G.Dm
H.Ds
I.Ic
J.Ro
K.Sh

Correct:A

14.Click the Point and Click button to begin. Click the option in iManager you would use to see every object that the Admin.SLC.DA user object is an explicit trustee of.

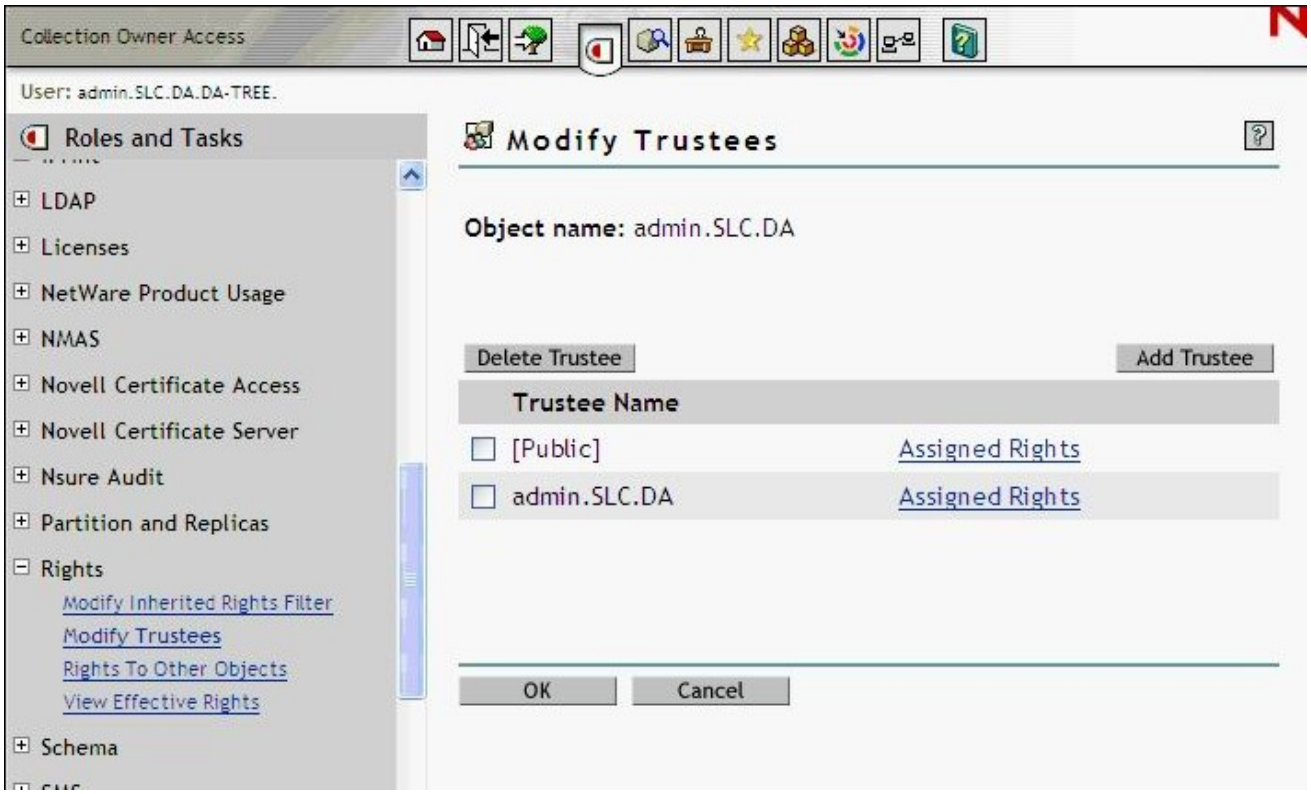

Correct:

15.Which tasks can be performed with ConsoleOne? (Choose 2.)

A.Manage licensing.

B.Assign rights to objects.

C.Browse very large trees.

D.Configure NDPS Brokers.

E.Change the server's IP address.

Correct:B C

16.Click the Exhibit button to begin. What element of this file system design violates Novell's recommendations?

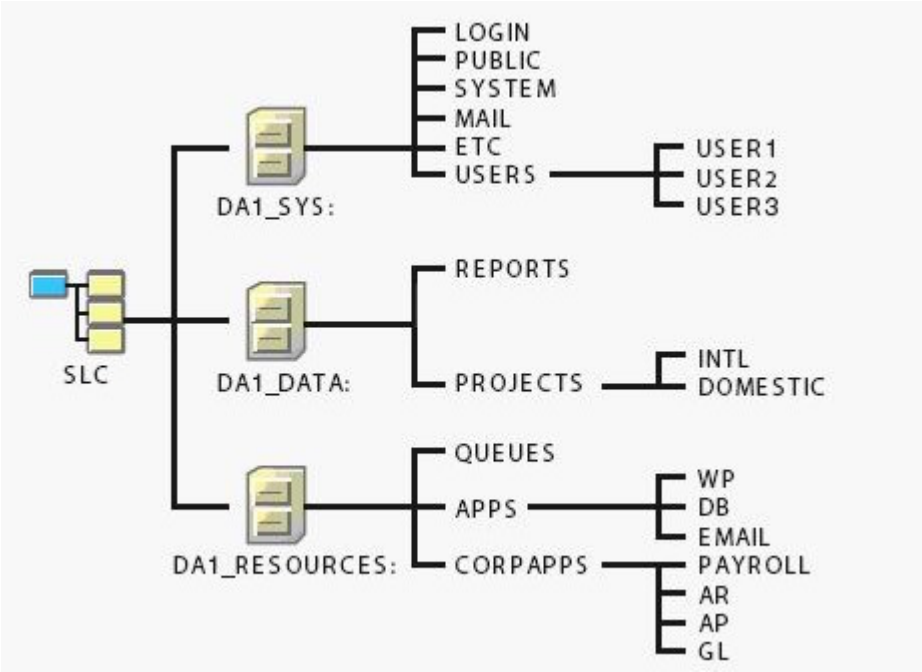

A.The MAIL directory should reside on a volume other than SYS.

B.The QUEUES directory should be placed on a volume other than DATA.

C.The USERS directory and subsequent subdirectories should not reside on SYS.

D.The SYS, DATA, and RESOURCES volume objects should not be placed in the same container.

E.The REPORTS, PROJECTS, QUEUES, APPS, and CORPAPPS directories shouldn't be split between DATA and RESOURCES.

Correct:C

17.You've been asked by management to implement Novell's iFolder product throughout the company. You've installed a new NetWare 6.5 server, named DA28, in the tree to provide iFolder services. The IP address of DA28 is 192.168.1.28. During the server install, you selected the iFolder patterned deployment. You now need to configure iFolder on the server. What URL can you use to access the iFolder Management Console?

A.http://192.168.1.28/vo/Admin

B.http://192.168.1.28:8008/Admin

C.http://192.168.1.28/iFolderAdmin

D.http://192.168.1.28/iFolder/Admin

E.http://192.168.1.28:443/iFolder/Admin
F.http://192.168.1.28/iFolderServer/Admin
G.http://192.168.1.28:631/iFolderServer/Admin
H.http://192.168.1.28/nps/iManager/iFolderAdmin

Correct:F

18.Click the Point and Click button to begin. A user in your company has moved from the London office to the Sydney office. You need to move her user object in the eDirectory tree to the appropriate container. Click the iManager option you would use to do this.

Correct:

19.The _____ feature of NSS allows the sum of the sizes of each volume in a partition to exceed the size of the partition itself. Answer:

A.OVERBOOKING

Correct:A

20.Which products does Virtual Office provide web-based access to? (Choose 3.)

A.eGuide
B.iFolder
C.NetStorage
D.WAN Manager
E.Remote Manager
F.Web Search Server

Correct:A B C